BODY, DECALS - Z26NMY99A4/B4/A6/B6 (901159)

2026 RZR - RZR XP S 4 1000 ULTIMATE (R01) - Z26NMY99A4/B4/A6/B6

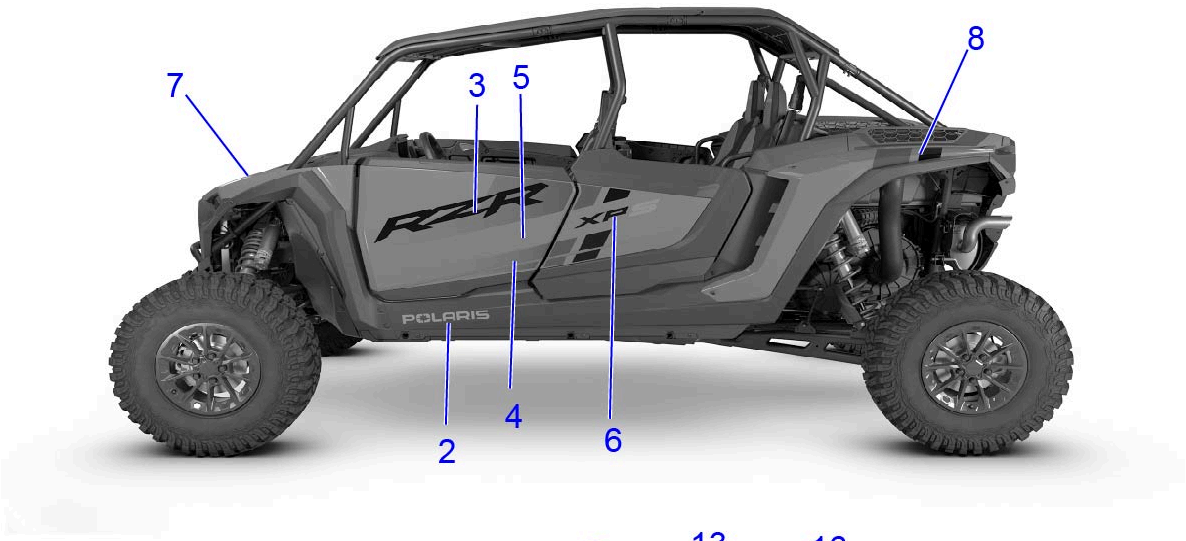

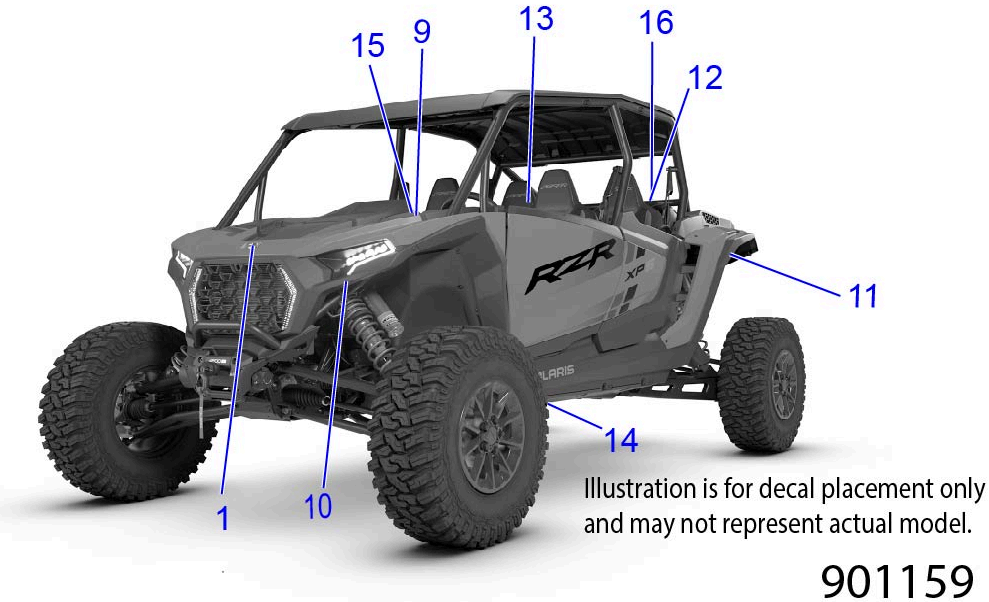

Illustration is for decal placement only and may not represent actual model.

901159

Reference #	Part#	Description	Quantity
1	5270256	BADGE-POLARIS STAR LG	1
2	7196462	DECAL-POLARIS,TITANIUM	2
3	7203246	DECAL-DOOR,RZR,LH [A4/B4]	1
3	7203247	DECAL-DOOR,RZR,RH [A4/B4]	1
3	7203260	DECAL-DOOR,RZR,LH [A6/B6]	1
3	7203261	DECAL-DOOR,RZR,RH [A6/B6]	1
4	7203248	DECAL-DOOR,LWR,LH [A4/B4]	1
4	7203249	DECAL-DOOR,LWR,RH [A4/B4]	1
4	7203262	DECAL-DOOR,LWR,LH [A6/B6]	1
4	7203263	DECAL-DOOR,LWR,RH [A6/B6]	1
5	7203472	DECAL-DOOR,MID,LH [A4/B4]	1
5	7203473	DECAL-DOOR,MID,RH [A4/B4]	1
5	7203476	DECAL-DOOR,MID,LH [A6/B6]	1
5	7203477	DECAL-DOOR,MID,RH [A6/B6]	1

6	7203625	DECAL-RR.DOOR,XPS,LH [A4/B4]	1
6	7203626	DECAL-RR.DOOR,XPS,RH [A4/B4]	1
6	7203264	DECAL-RR.DOOR,XPS,LH [A6/B6]	1
6	7203265	DECAL-RR.DOOR,XPS,RH [A6/B6]	1
7	7203627	DECAL-HOOD,LH [A4/B4]	1
7	7203628	DECAL-HOOD,RH [A4/B4]	1
7	7203629	DECAL-HOOD,LH [A6/B6]	1
7	7203630	DECAL-HOOD,RH [A6/B6]	1
8	7203244	DECAL-RR.FNDR,LH [A4/B4]	1
8	7203245	DECAL-RR.FNDR,RH [A4/B4]	1
8	7203258	DECAL-RR.FNDR,LH [A6/B6]	1
8	7203259	DECAL-RR.FNDR,RH [A6/B6]	1
9	7188542	DECAL-WARN,PROPER USE,4 OC	1
10	7197290	DECAL-REFLECTOR,AMBER,LH	1
10	7197291	DECAL-REFLECTOR,AMBER,RH	1
11	7197288	DECAL-RED REFLECTOR,LH	1
11	7197289	DECAL-RED REFLECTOR,RH	1
12	7300842	DECAL-WARN,PFC	1
13	7300168	DECAL-WARN,REAR SEAT	1
14	7177052	DECAL-BATTERY,POLARIS	1
15	7300480	DECAL-WARN,SEATBELT/DRV/RIDERS	1
16	7301382	DECAL-WARN,TIRE PRESS,XPS	1

Copyright 1996-2026 Polaris Industries U.S.A All rights reserved.